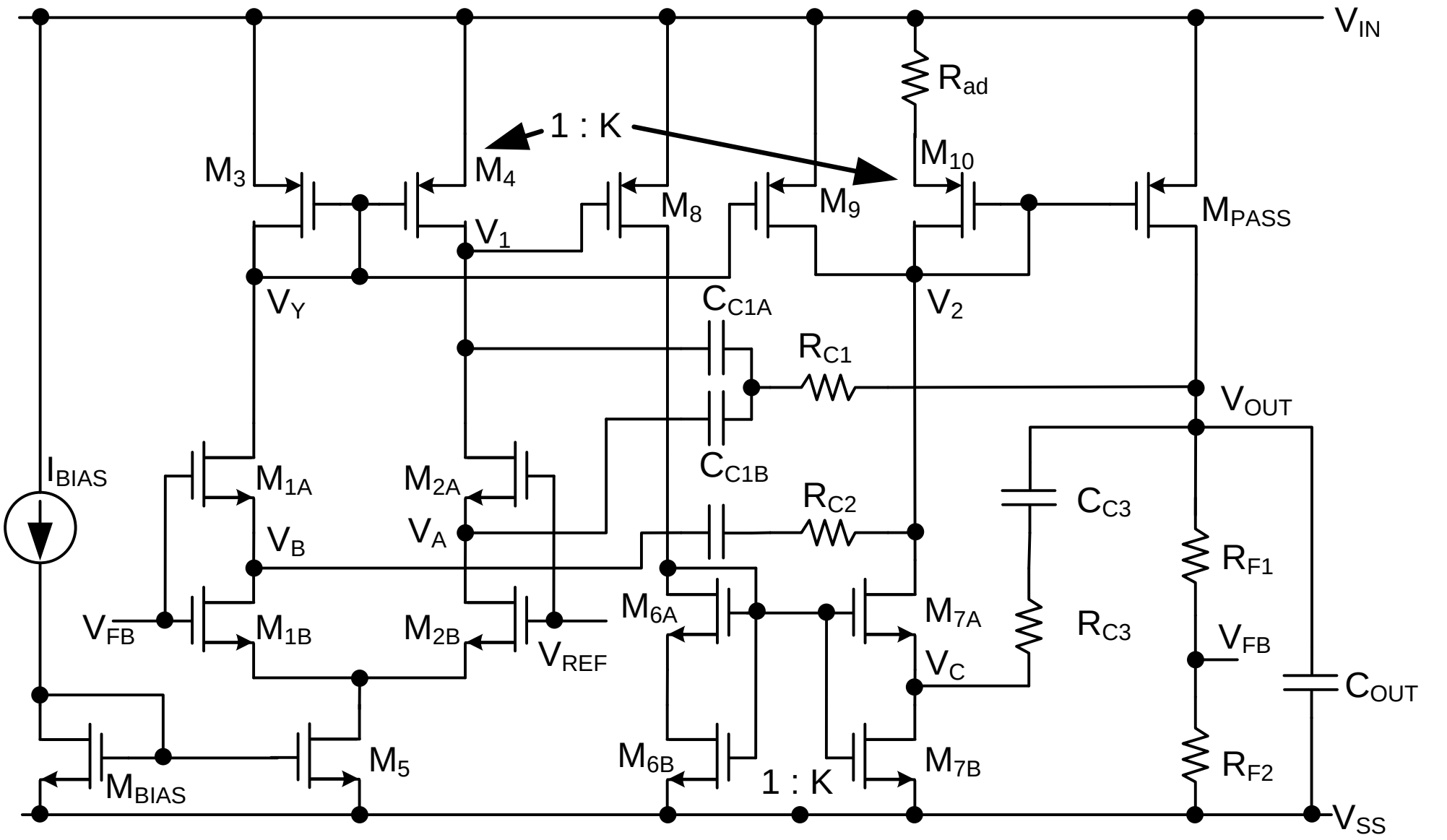
V_IN
R_ad
1 : K
M_3
M_4
M_10
M_8
M_9
M_PASS
V_1
V_Y
V_2
C_C1A
R_C1
V_OUT
C_C1B
I_BIAS
M_1A
M_2A
R_C2
C_C3
V_B
V_A
R_F1
V_FB
M_1B
M_2B
V_REF
M_6A
M_7A
R_C3
V_FB
V_C
C_OUT
M_BIAS
M_5
M_6B
1 : K
M_7B
R_F2
V_SS