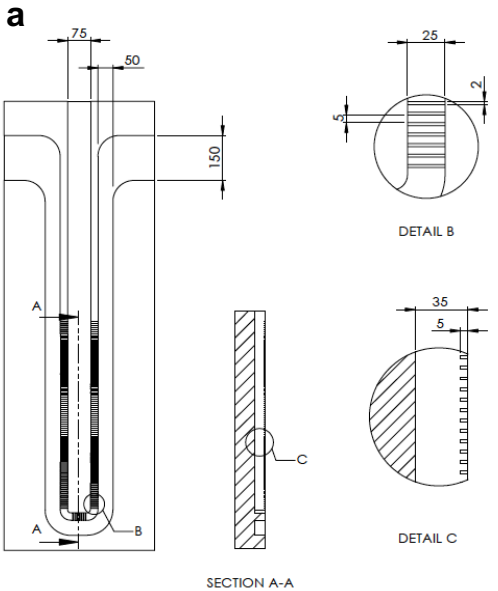
a
75
50
150
A
A
B
C
SECTION A-A
25
2
5
DETAIL B
35
5
DETAIL C

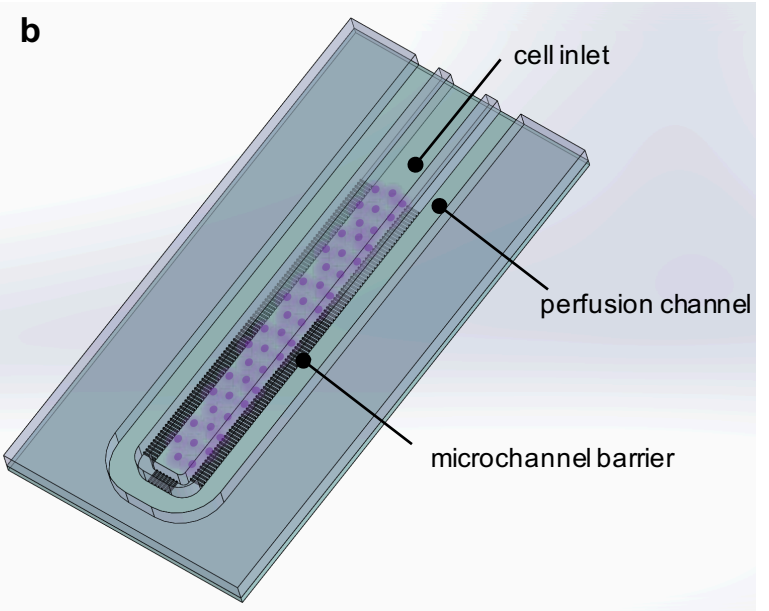
b
cell inlet
perfusion channel
microchannel barrier