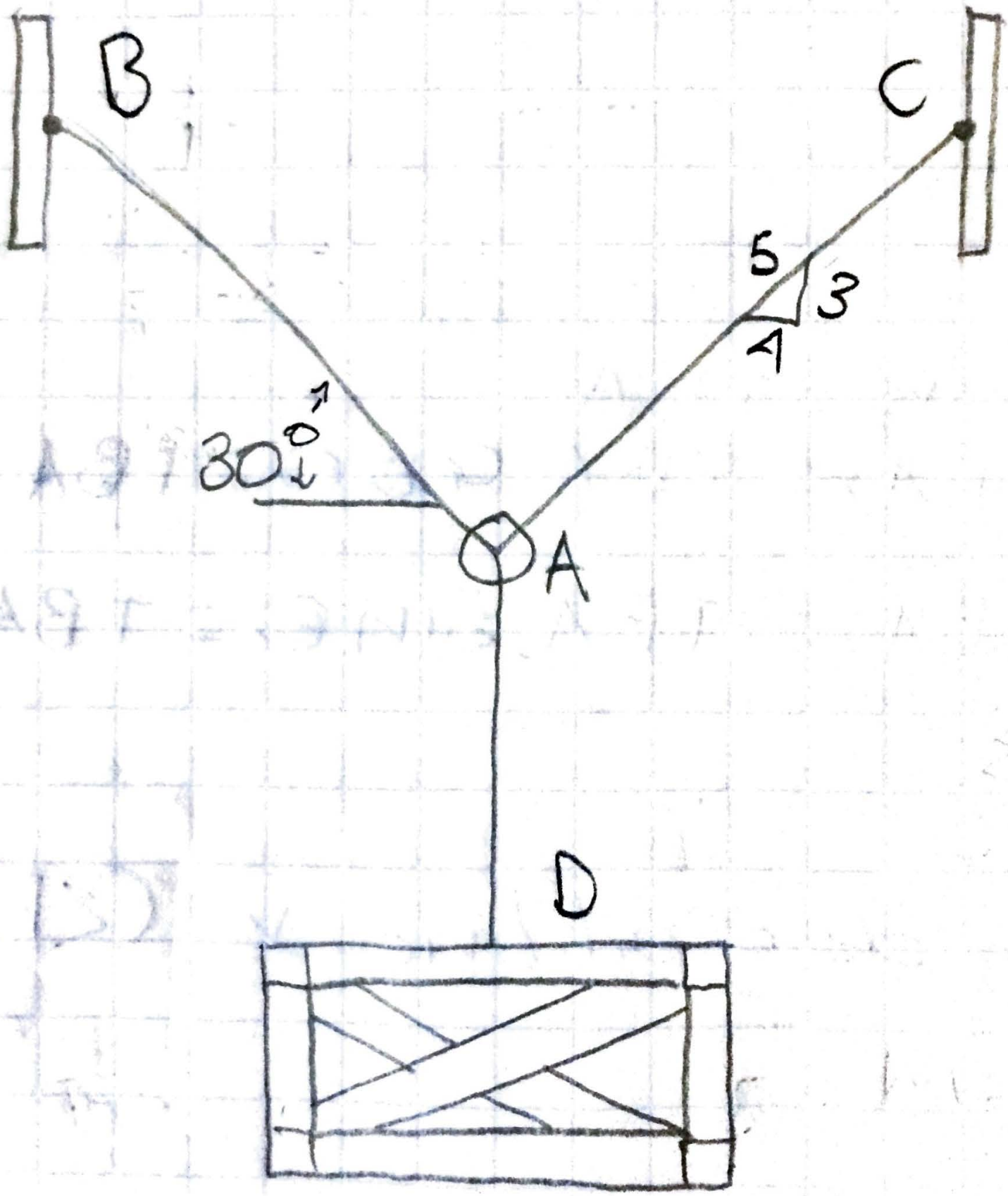
B
C
5
3
4
30°
A
D