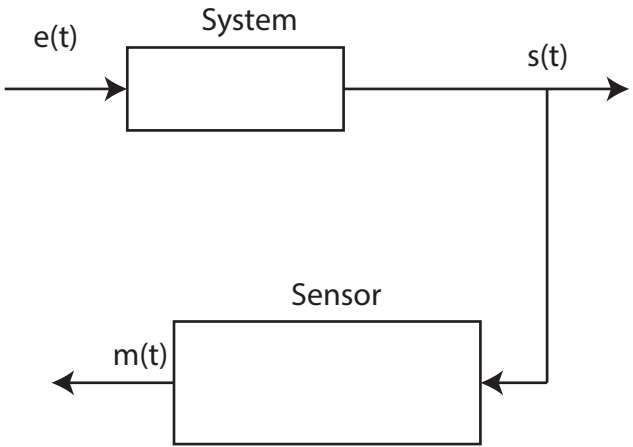
System
e(t)
s(t)
Sensor
m(t)