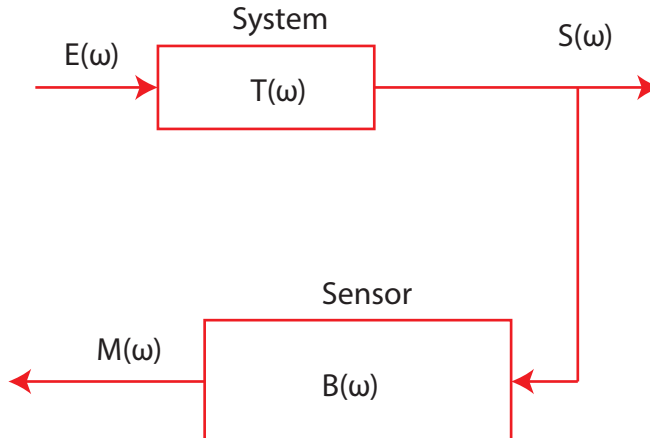
System
E(ω)
T(ω)
S(ω)
Sensor
M(ω)
B(ω)