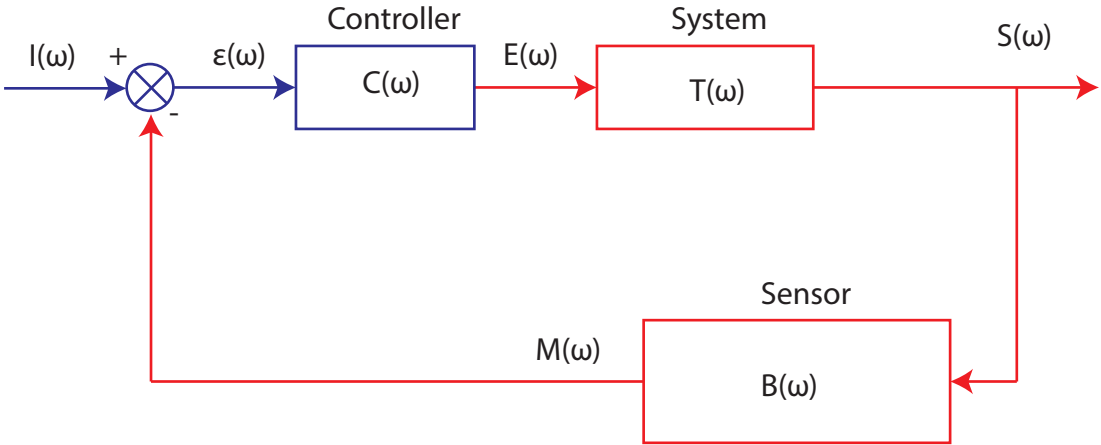
Controller
System
I(ω)
+
ε(ω)
C(ω)
E(ω)
T(ω)
S(ω)
-
Sensor
M(ω)
B(ω)